6204

SKF Explorer

Dimensions

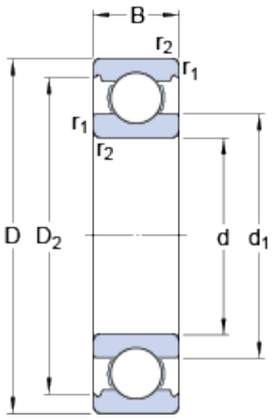

d		20	mm
D		47	mm
B		14	mm
d_1	≈	28.8	mm
D_2	≈	40.59	mm

Abutment dimensions

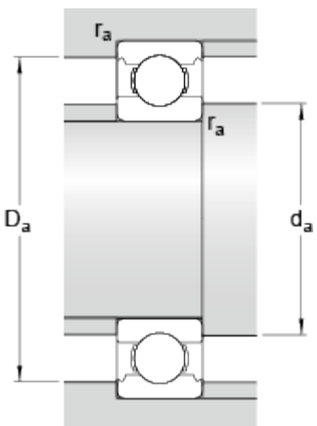

d_a	min.	25.6	mm
D_a	max.	41.4	mm
r_a	max.	1	mm

Calculation data

Basic dynamic load rating	C	13.5	kN
Basic static load rating	C_0	6.55	kN
Fatigue load limit	P_u	0.28	kN
Reference speed		32000	r/min
Limiting speed		20000	r/min
Calculation factor	k_r	0.025	
Calculation factor	f_0	13	

Mass

Mass bearing	0.1	kg