Non-relieving models

Brass body, corrosion resistant construction

Full flow gauge ports can be used as auxiliary outlets

Not for potable water



R43



11-009

Technical data

Fluid:
Water and compressed air, neutral gases
NOTE: Contact technical support for use with other media.
Maximum pressure
400 psig (27 bar)

Operating temperature:
Water service: 35° to 200°F (2° to 93°C)
Air service: -30° to 200°F (-34° to 93°C)*
* Air supply must be dry enough to avoid ice formation at temperatures below 35°F (2°C).

R43 Gauge ports
1/4" PTF with PTF main ports
1/4" ISO G with ISO G main ports
11-009 Gauge ports:
1/8" PTF with PTF main ports
G1/8 with ISO G main ports

Materials:
Body: brass
Bonnet: aluminum
Valve: brass
Bottom plug: brass
Elastomers: nitrile

R43 Ordering information

Models listed have T-handle adjustment, 5 to 125 psig (0.3 to 8.5 bar) outlet pressure adjustment range*, and PTF threads. A gauge is not included.

ISO Symbol	Port	Model	Flow† U.S. gpm (lpm)	Weight lb (kg)
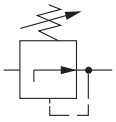	1/4"	R43-201-NNLA	6 (23)	2.4 (1.09)
	3/8"	R43-301-NNLA	6 (23)	2.4 (1.09)
	1/2"	R43-406-NNLA	9 (34)	2.4 (1.09)

† Typical flow with 150 psig (10 bar) inlet pressure, 90 psig (6.3 bar) set pressure and 15 psig (1 bar) droop from set.

11-009 Ordering information

Models listed have PTF threads, T-bar adjustment, non-relieving diaphragm, and 5 to 125 psig (0.3 to 8.5 bar) outlet pressure adjustment range*. A gauge is not included.

Port Size	Model Number	Flow † U.S. gpm (lpm)	Weight lbs (kg)
3/4"	11-009-065	27.5 (104)	7.8 (3.54)
1"	11-009-081	27.5 (104)	7.5 (3.40)

* Outlet pressure can be adjusted to pressures in excess of, and less than, those specified. Do not use these units to control pressures outside of the specified ranges.
† Typical flow with 100 psig (6.9 bar) inlet pressure, 60 psig (4 bar) set pressure and 15 psig (1 bar) droop from set.

Panel mounting hole diameter: 1.89" (48 mm)
Maximum panel thickness: 0.19" (5 mm)

R43

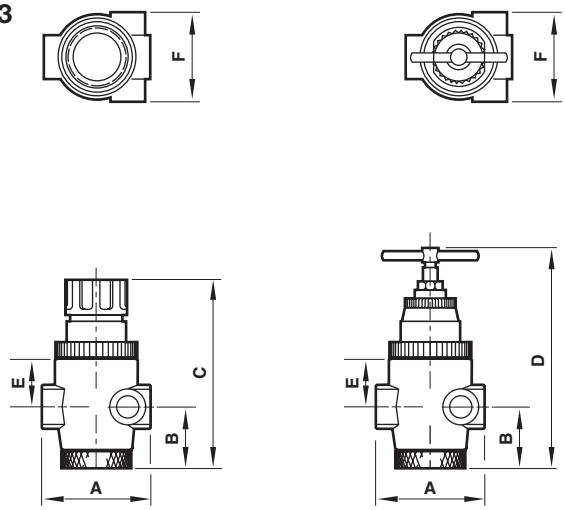

Port Size	A	B	C	D	E	F
1/4", 3/8"	2.76 (70)	1.52 (39)	4.86 (124)	5.75 (146)	1.21 (31)	2.31 (59)
1/2"	3.34 (85)	1.59 (41)	5.01 (127)	5.90 (150)	1.28 (33)	2.44 (62)

11-009

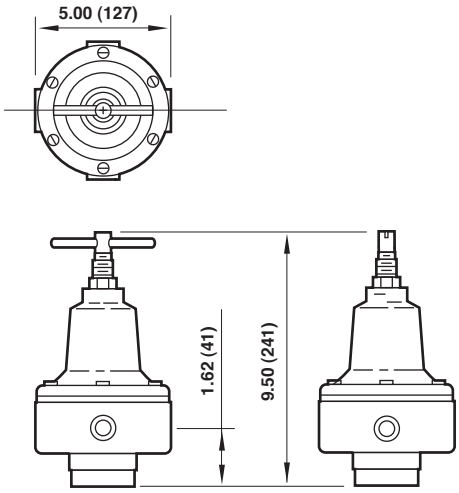

Typical Performance Characteristics

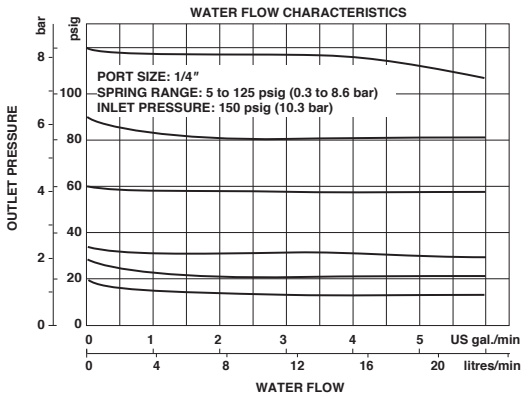

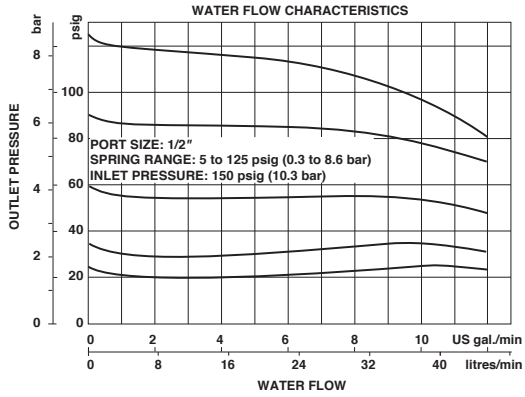

Service Kits

Item	Type	Part number
Service Kit	For 1/4" and 3/8" ported units	5298-03
	For 1/2" ported units	5298-10

Service kit includes diaphragm, o-rings, valve, valve spring.

Typical Performance Characteristics

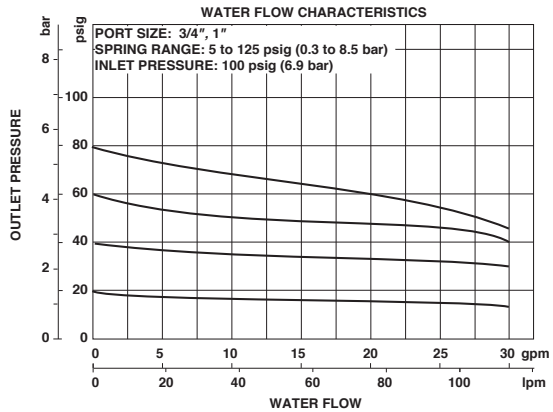

Service Kits

Type	Part number
Non-relieving	2436-03

Service kit includes diaphragm, valve seat, valve pin, valve pin gasket, valve, valve spring, and o-rings.

Dimensions in inches (mm)