

Precision locknuts ZM25 (Series ZM)

locking pegs, radially arranged

The datasheet is only an overview of dimensions and basic load ratings of the selected product. Please always observe all the guidelines in these overview pages. Further information is given on many products under the menu item "Description". You can also order comprehensive information via the Catalogue ordering system (http://www.ina.de/content.ina.de/en/mediathek/library/library.jsp) or by telephone on +49 (91 32) 82 - 28 97.

d	M25X1,5		
D	38	mm	
h	12	mm	
b	5	mm	
c	6	mm	
d_1	33	mm	
m	M6		Grub screw thread
t	2	mm	
m	0,055	kg	Mass
M_m	5	Nm	Tightening torque of grub screw
F_{aB}	90000	N	Ultimate axial load
M_L	60	Nm	Breakaway torque
M_{AL}	25	Nm	Reference tightening torque for breakaway torque
M_M	0,157	kg x cm^2	Mass moment of inertia

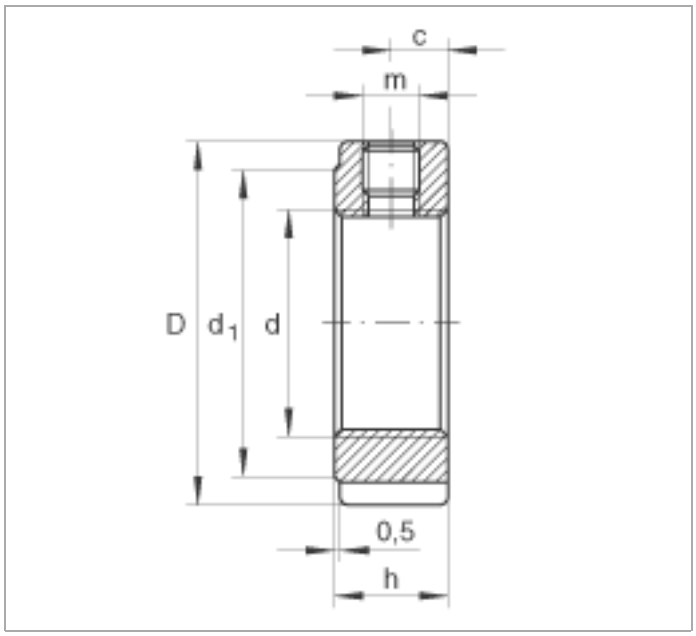
c
m
D
d_1
d
0,5
h

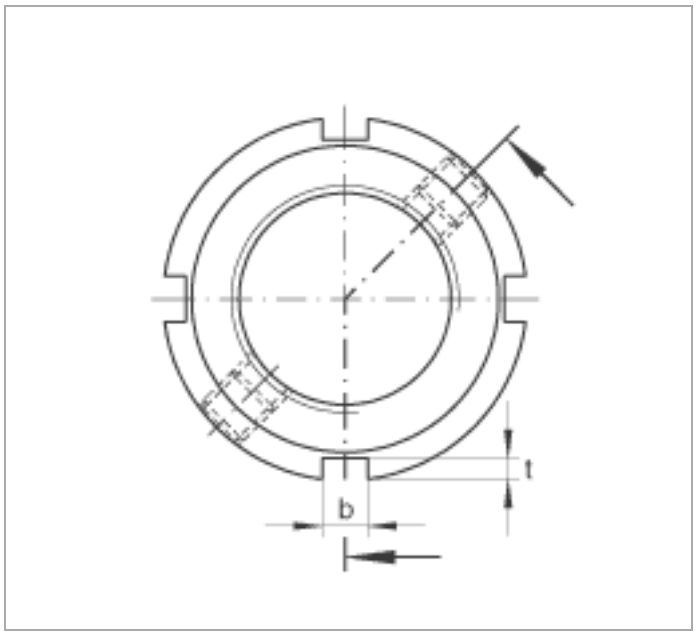
t
b