

Precision locknuts ZM125 (Series ZM)

locking pegs, radially arranged

The datasheet is only an overview of dimensions and basic load ratings of the selected product. Please always observe all the guidelines in these overview pages. Further information is given on many products under the menu item "Description". You can also order comprehensive information via the Catalogue ordering system (http://www.ina.de/content.ina.de/en/mediathek/library/library.jsp) or by telephone on +49 (91 32) 82 - 28 97.

d	M125X2	
D	160 mm	
h	24 mm	
b	12 mm	
c	12 mm	
d_1	148 mm	
m	M10	Grub screw thread
t	5 mm	
m	1,33 kg	Mass
M_m	20 Nm	Tightening torque of grub screw
F_{aB}	610000 N	Ultimate axial load
M_L	640 Nm	Breakaway torque
M_{AL}	500 Nm	Reference tightening torque for breakaway torque
M_M	76,1 kg x cm^2	Mass moment of inertia

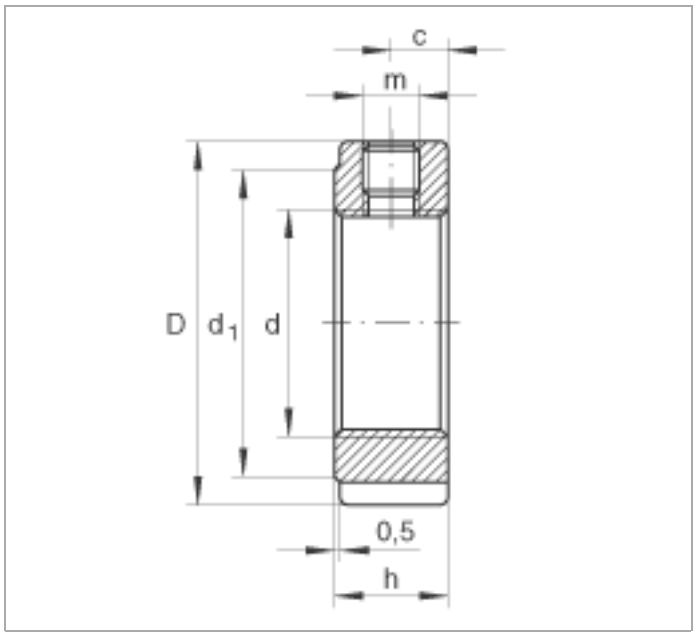
c
m
D
d_1
d
0,5
h

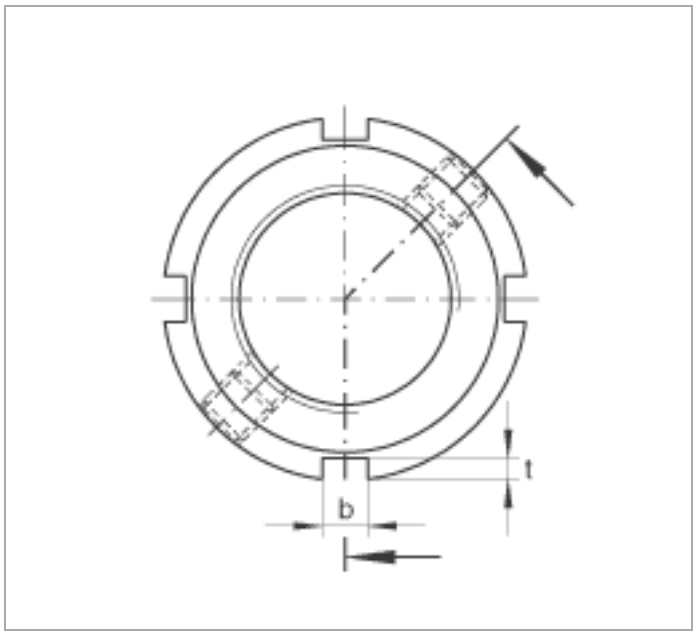
t
b