

Take-up housing units TTUE60 (Series TTUE)

cast iron housing, radial insert ball bearing with eccentric locking collar, T seals

The datasheet is only an overview of dimensions and basic load ratings of the selected product. Please always observe all the guidelines in these overview pages. Further information is given on many products under the menu item "Description". You can also order comprehensive information via the Catalogue ordering system (http://www.ina.de/content.ina.de/en/mediathek/library/library.jsp) or by telephone on +49 (91 32) 82 - 28 97.

d	60	mm	
L	186	mm	
H	146	mm	
A	60	mm	
A_1	22	mm	Tolerance: H13
A_2	44	mm	
B_1	77,9	mm	
d_3 max	84	mm	
H_1	130	mm	Tolerance: +/-0,15
L_1	118	mm	
L_2	19	mm	
L_3	100	mm	
N	35	mm	
N_1	32	mm	
N_2	63,5	mm	
Q	Rp1/8		
S_1	46,9	mm	
T	102	mm	
m	4,76	kg	Mass
C_r	56000	N	Basic dynamic load rating, radial
C_{0r}	36000	N	Basic static load rating, radial
	GG.TUE12		Designation of housing
	GE60-KTT-B		Designation of bearing

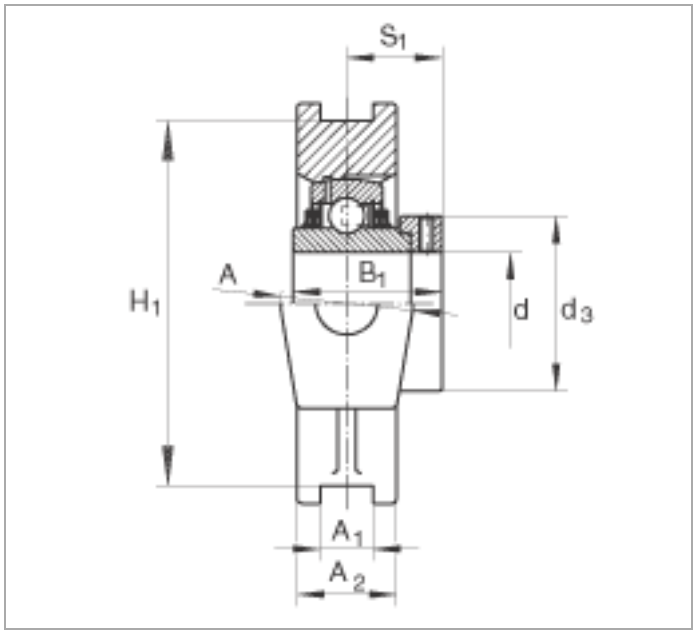
S1
H1
A
B1
d
d3
A1
A2

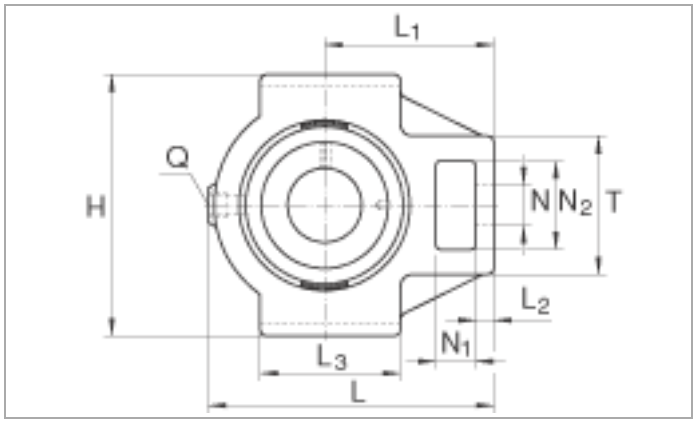
L1
Q
H
N
N2
T
L2
N1
L3
L