Housing units RMEO35 (Series RMEO)

four-bolt flanged housing units, cast iron, centring spigot, eccentric locking collar, series 63, R seals

The datasheet is only an overview of dimensions and basic load ratings of the selected product. Please always observe all the guidelines in these overview pages. Further information is given on many products under the menu item "Description". You can also order comprehensive information via the Catalogue ordering system (http://www.ina.de/content.ina.de/en/mediathek/library/library.jsp) or by telephone on +49 (91 32) 82 - 28 97.

d	35	mm	
H	174	mm	
B_1	51,6	mm	
A	25	mm	
A_1	16	mm	
A_2	2	mm	
$d_{3\,max}$	55	mm	
J	141	mm	
N	19	mm	
Q	M6		
S	2	mm	
U	35,35	mm	
Z	100	mm	Tolerance: h8
m	2,4	kg	Mass
C_r	39000	N	Basic dynamic load rating, radial
C_{0r}	20900	N	Basic static load rating, radial
	GG.MEO07		Designation of housing
	GNE35-KRR-B		Designation of bearing

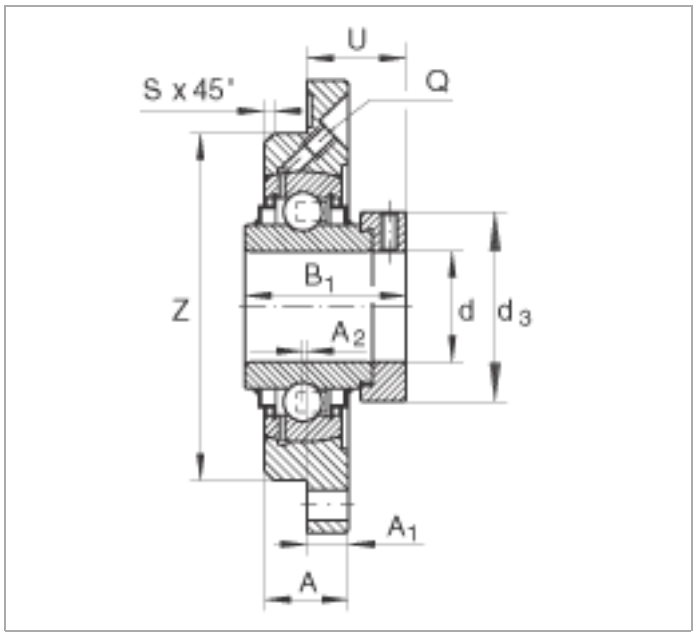
U
Q
S x 45°
Z
B1
A2
d
d3
A1
A

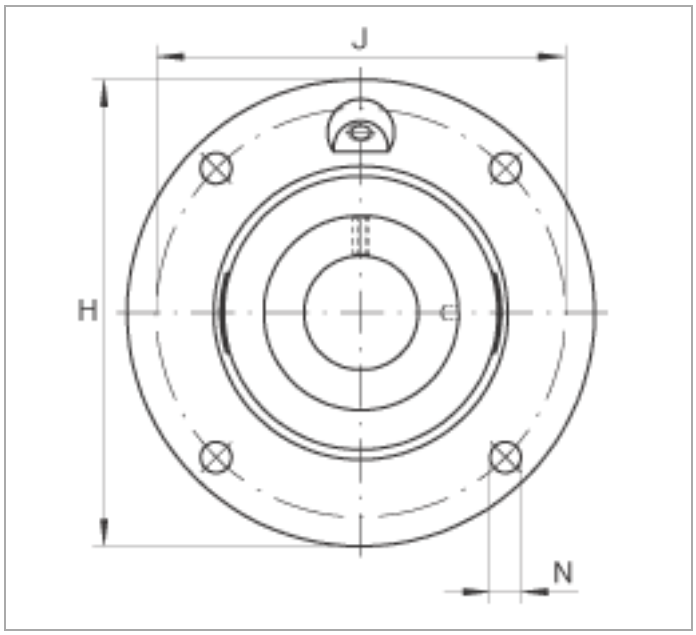
J
H
N