

Housing units RCJY16 (Series RCJY)

four-bolt flanged housing units, cast iron, grub screws in inner ring, R seals

The datasheet is only an overview of dimensions and basic load ratings of the selected product. Please always observe all the guidelines in these overview pages. Further information is given on many products under the menu item "Description". You can also order comprehensive information via the Catalogue ordering system (http://www.ina.de/content.ina.de/en/mediathek/library/library.jsp) or by telephone on +49 (91 32) 82 - 28 97.

d	16	mm	
L	76	mm	
U	32,9	mm	
A	27	mm	
A_1	9,5	mm	
A_2	17	mm	
B	27,4	mm	
J	54	mm	
N	11,5	mm	
Q	M6		
V	58	mm	
m	0,51	kg	Mass
C_r	10100	N	Basic dynamic load rating, radial
C_{0r}	4750	N	Basic static load rating, radial
	GG.CJ03		Designation of housing
	GYE16-KRR-B		Designation of bearing

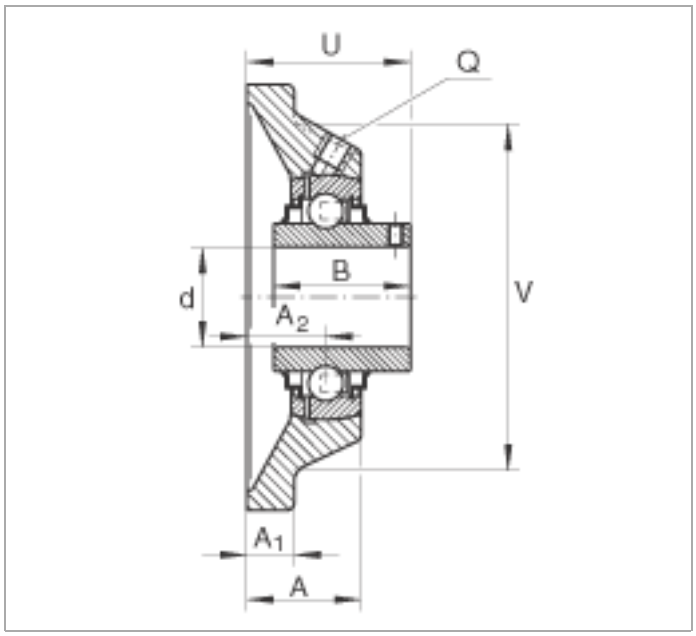
U
Q
B
d
V
A2
A1
A

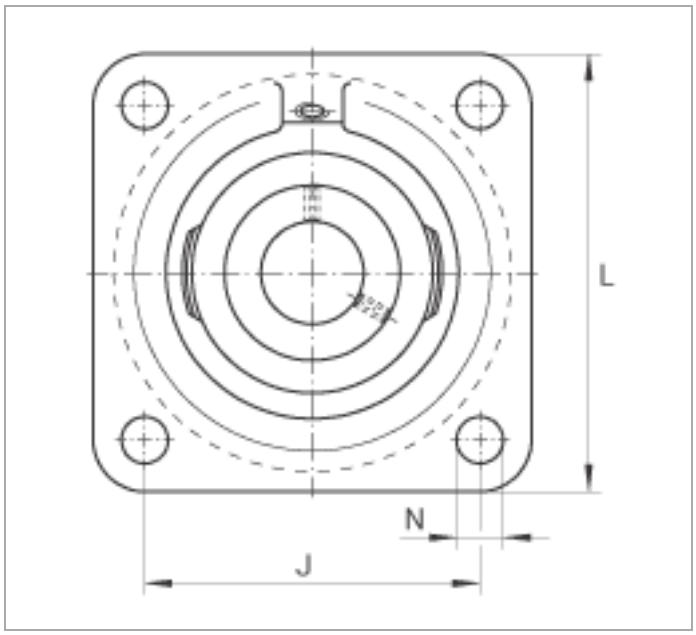
L
N
J