Housing units RCJ50-N (Series RCJ)

four-bolt flanged housing units, cast iron, eccentric locking collar, R seals

The datasheet is only an overview of dimensions and basic load ratings of the selected product. Please always observe all the guidelines in these overview pages. Further information is given on many products under the menu item "Description". You can also order comprehensive information via the Catalogue ordering system (http://www.ina.de/content.ina.de/en/mediathek/library/library.jsp) or by telephone on +49 (91 32) 82 - 28 97.

d	50 mm	
L	143 mm	
U	66,1 mm	
A	39 mm	
A_1	13 mm	
A_2	28 mm	
B_1	62,8 mm	
$d_{3\,max}$	69 mm	
J	111 mm	
N	18 mm	
Q	Rp1/8	
V	125 mm	
m	2,53 kg	Mass
C_r	37500 N	Basic dynamic load rating, radial
C_{0r}	23200 N	Basic static load rating, radial
	GG.CJ10-N	Designation of housing
	GE50-KRR-B	Designation of bearing
	KASK10	Bearing end cap, closed design. To be ordered separately.
		Slot for bearing end cap

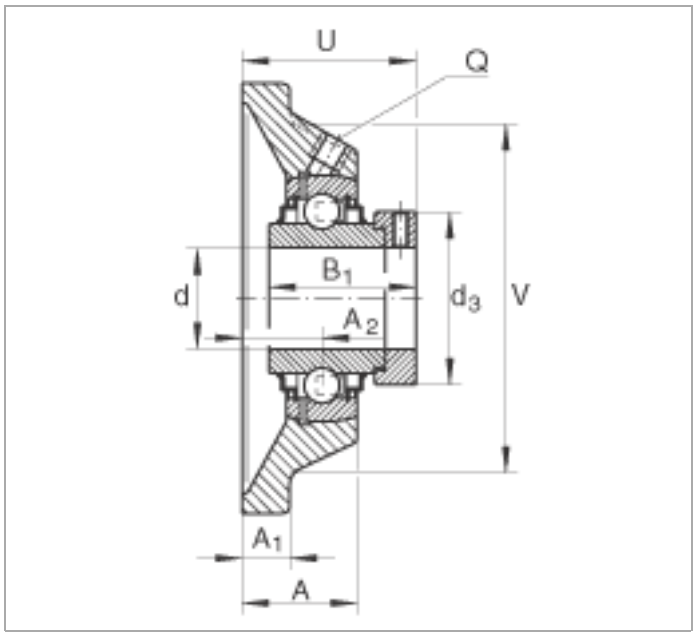
U
Q
d
B1
d3
V
A2
A1
A

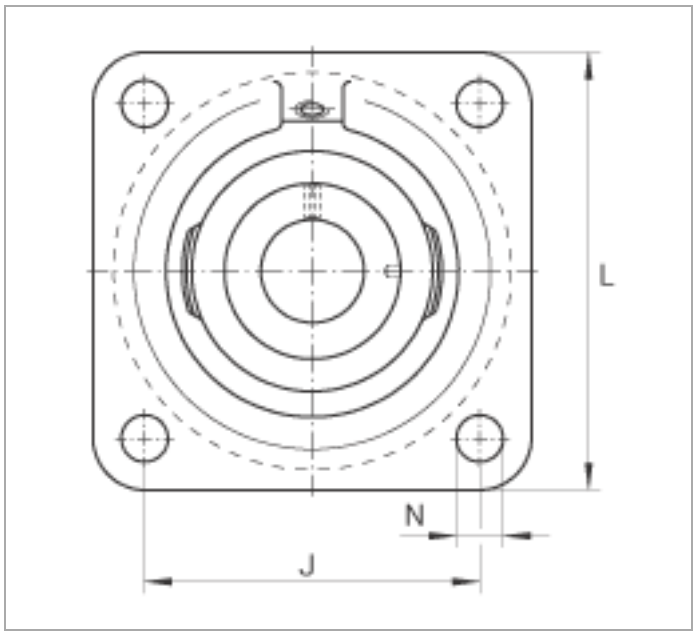
L
N
J