

Plummer block housing units

RASEL30-N (Series RASEL)

cast iron housing, non-locating bearing, drive slot on inner ring, R seals

The datasheet is only an overview of dimensions and basic load ratings of the selected product. Please always observe all the guidelines in these overview pages. Further information is given on many products under the menu item "Description". You can also order comprehensive information via the Catalogue ordering system (http://www.ina.de/content.ina.de/en/mediathek/library/library.jsp) or by telephone on +49 (91 32) 82 - 28 97.

d	30	mm	
L	158	mm	
H_2	82	mm	
A	40	mm	
A_1	25	mm	
B	36,5	mm	
H	42,9	mm	
H_1	17	mm	
J	118	mm	
N	14	mm	
N_1	22	mm	
Q	Rp1/8		
S_1	22	mm	
m	1,1	kg	Mass
C_r	20700	N	Basic dynamic load rating, radial
C_{0r}	11300	N	Basic static load rating, radial
	GG.ASE06-N		Designation of housing
	GLE30-KRR-B		Designation of bearing
	KASK06		Bearing end cap, closed design. To be ordered separately.
			Slot for bearing end cap

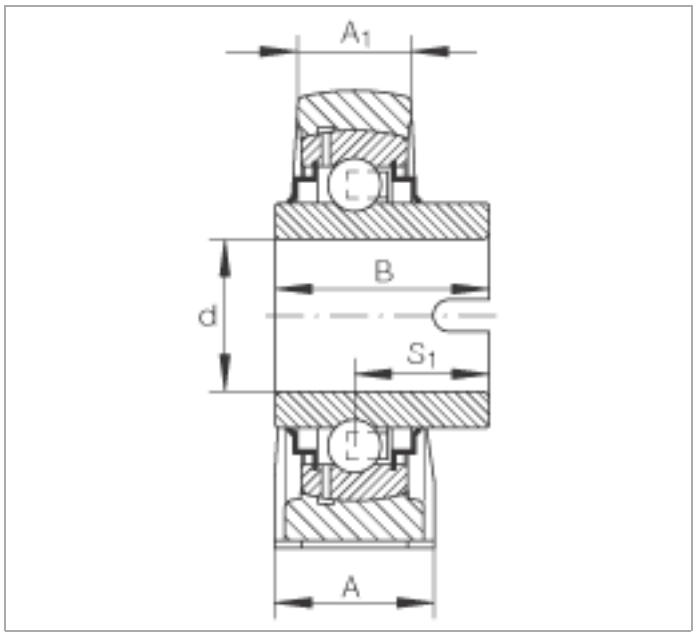
A1
B
d
S1
A

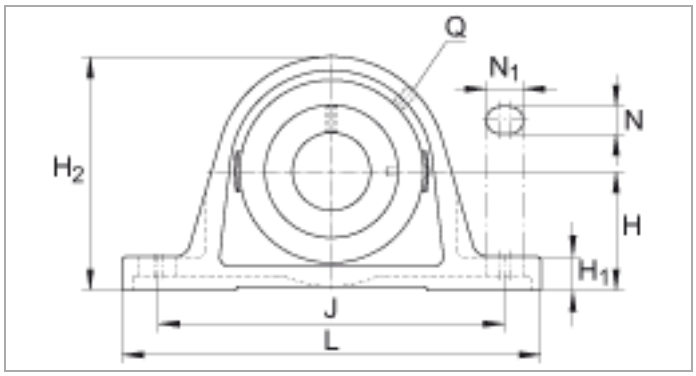
Q
N1
N
H2
H
H1
J
L