

Housing units RA30 (Series RA)

three/four-bolt flanged housing units, sheet steel, eccentric locking collar, P seals

The datasheet is only an overview of dimensions and basic load ratings of the selected product. Please always observe all the guidelines in these overview pages. Further information is given on many products under the menu item "Description". You can also order comprehensive information via the Catalogue ordering system (http://www.ina.de/content.ina.de/en/mediathek/library/library.jsp) or by telephone on +49 (91 32) 82 - 28 97.

d	30	mm	
H	112,7	mm	
B_1	35,8	mm	
A	8,7	mm	
$d_{3\,max}$	44	mm	
J	90,5	mm	
N	10,5	mm	
n	3		Number of screw holes
S	2,5	mm	
U	29,2	mm	
V	71	mm	
m	0,61	kg	Mass
$C_{0r\,G}$	5000	N	Load carrying capacity of housing, radial
C_r	20700	N	Basic dynamic load rating, radial
C_{0r}	11300	N	Basic static load rating, radial
	FLAN62-MSB (2 X)		Designation of housing
	RAE30-NPP-B		Designation of bearing

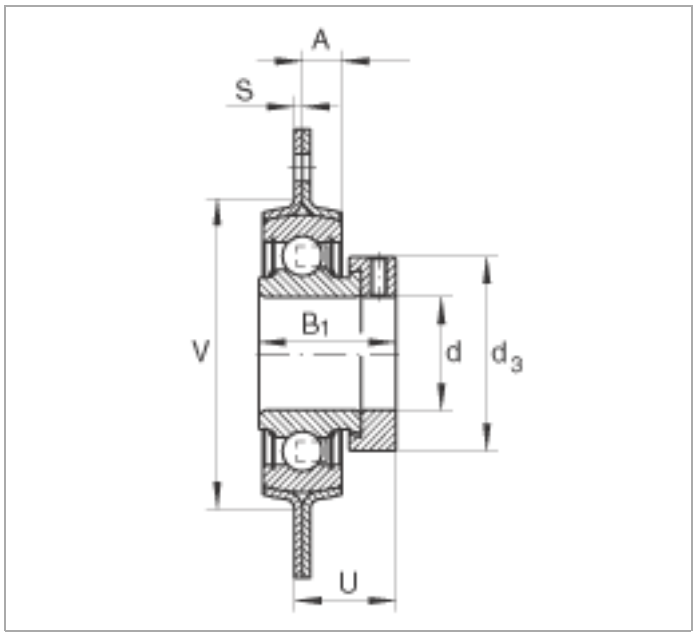
A
S
V
B1
d
d3
U

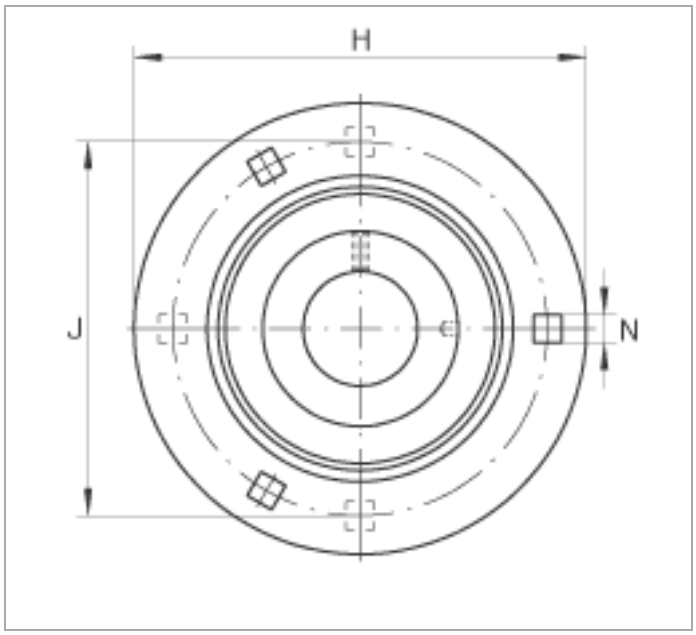
H
J
N