

# Take-up housing units PTUEY50 (Series PTUEY)

## cast iron housing, radial insert ball bearing with grub screws in inner ring, P seals

The datasheet is only an overview of dimensions and basic load ratings of the selected product. Please always observe all the guidelines in these overview pages. Further information is given on many products under the menu item "Description". You can also order comprehensive information via the Catalogue ordering system (http://www.ina.de/content.ina.de/en/mediathek/library/library.jsp) or by telephone on +49 (91 32) 82 - 28 97.

| | | | |
|---|---|---|---|
| d | 50 | mm | |
| L | 148 | mm | |
| H | 115 | mm | |
| | | | |
| A | 50 | mm | |
| $A_1$ | 16 | mm | Tolerance: H13 |
| $A_2$ | 35 | mm | |
| B | 43 | mm | |
| $H_1$ | 102 | mm | Tolerance: +/-0,15 |
| $L_1$ | 90 | mm | |
| $L_2$ | 16 | mm | |
| $L_3$ | 85 | mm | |
| N | 29 | mm | |
| $N_1$ | 20 | mm | |
| $N_2$ | 49 | mm | |
| Q | Rp1/8 | | |
| $S_1$ | 32 | mm | |
| T | 83 | mm | |
| | | | |
| m | 2,25 | kg | Mass |
| $C_r$ | 37500 | N | Basic dynamic load rating, radial |
| $C_{0r}$ | 23200 | N | Basic static load rating, radial |
| | GG.TUE10 | | Designation of housing |
| | GAY50-NPP-B | | Designation of bearing |

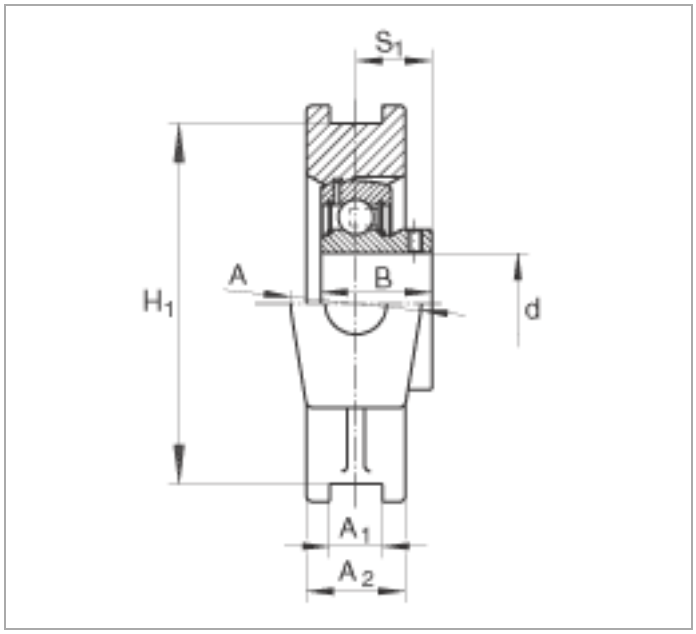
S1
H1
A
B
d
A1
A2

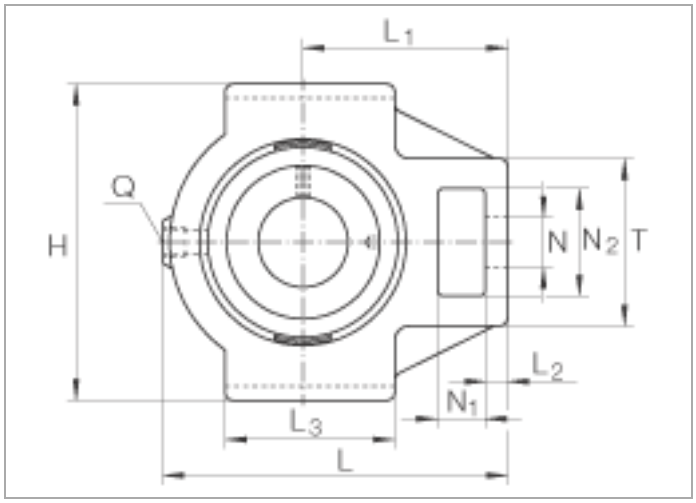
L1
Q
H
N
N2
T
L2
N1
L3
L