

Housing units PMEY60-N (Series PMEY)

four-bolt flanged housing units, cast iron, centring spigot, grub screws in inner ring, P seals

The datasheet is only an overview of dimensions and basic load ratings of the selected product. Please always observe all the guidelines in these overview pages. Further information is given on many products under the menu item "Description". You can also order comprehensive information via the Catalogue ordering system (http://www.ina.de/content.ina.de/en/mediathek/library/library.jsp) or by telephone on +49 (91 32) 82 - 28 97.

d	60 mm	
H	195 mm	
B	47 mm	
A	29 mm	
A_1	16 mm	
A_2	1 mm	
J	160 mm	
N	18 mm	
Q	Rp1/8	
S	3 mm	
U	33 mm	
Z	135 mm	Tolerance: h8
m	3,41 kg	Mass
C_r	56000 N	Basic dynamic load rating, radial
C_{0r}	36000 N	Basic static load rating, radial
	GG.ME12-N	Designation of housing
	GAY60-NPP-B	Designation of bearing
	KASK12	Bearing end cap, closed design. To be ordered separately.
		Slot for bearing end cap

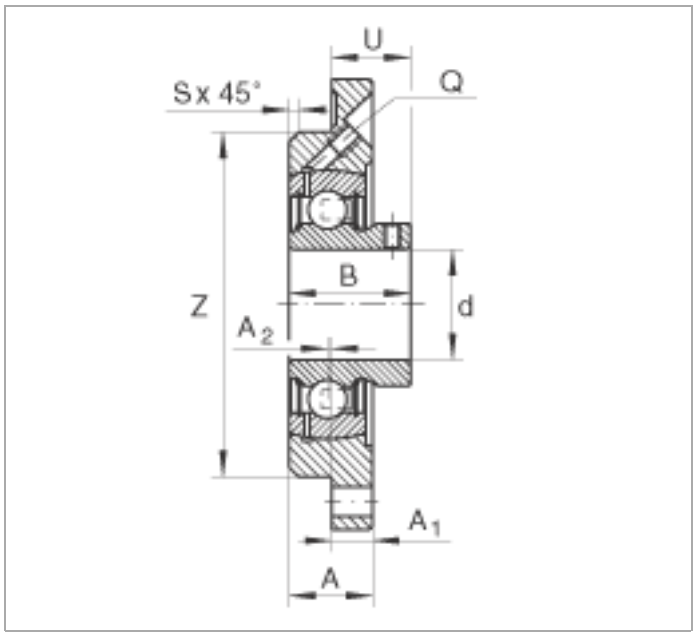
U
Q
S x 45°
Z
B
d
A2
A1
A

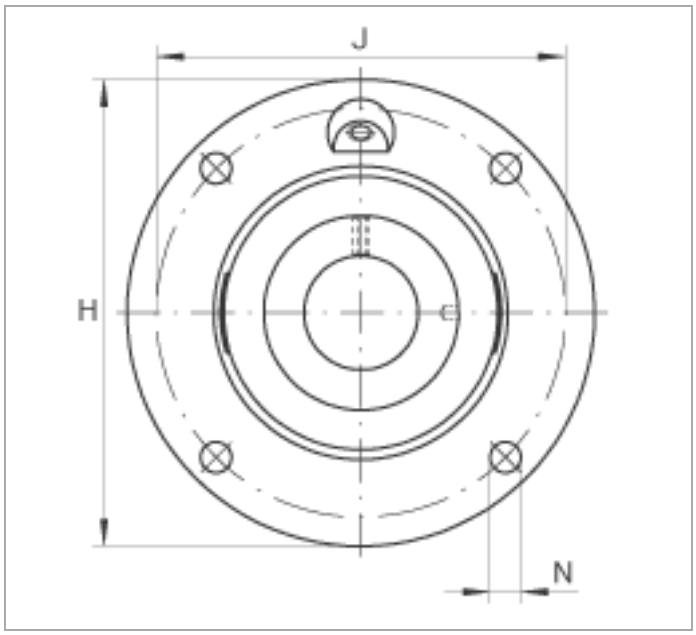
J
H
N