

Housing units PCFTR35 (Series PCFTR)

three-bolt flanged housing units, cast iron, eccentric locking collar, P seals

The datasheet is only an overview of dimensions and basic load ratings of the selected product. Please always observe all the guidelines in these overview pages. Further information is given on many products under the menu item "Description". You can also order comprehensive information via the Catalogue ordering system (http://www.ina.de/content.ina.de/en/mediathek/library/library.jsp) or by telephone on +49 (91 32) 82 - 28 97.

d	35 mm	
H_2	128 mm	
U	45,1 mm	
A	27 mm	
A_1	14 mm	
A_2	15,6 mm	
B_1	39 mm	
d_3 max	55 mm	
H_1	48 mm	
J	129,7 mm	
N	14 mm	
Q	Rp1/8	
m	1,34 kg	Mass
C_r	27500 N	Basic dynamic load rating, radial
C_{0r}	15300 N	Basic static load rating, radial
	GG.CFTR07	Designation of housing
	GRAE35-NPP-B	Designation of bearing

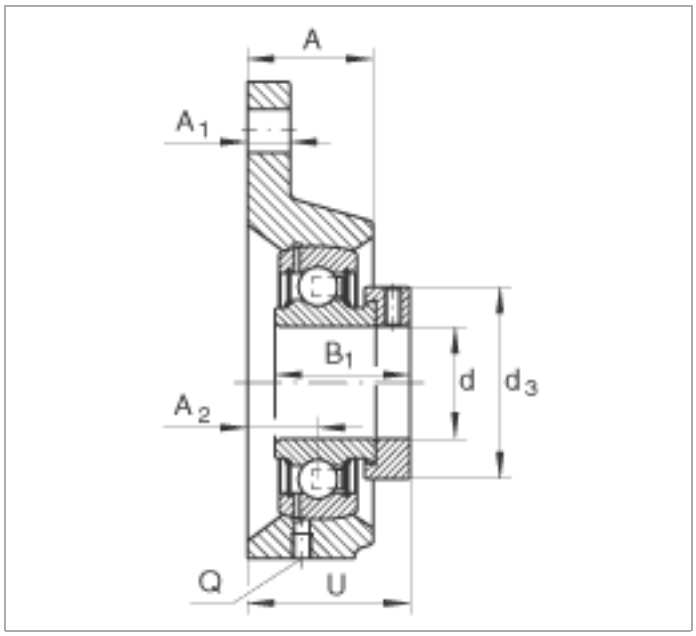
A
A1
B1
d
d3
A2
Q
U

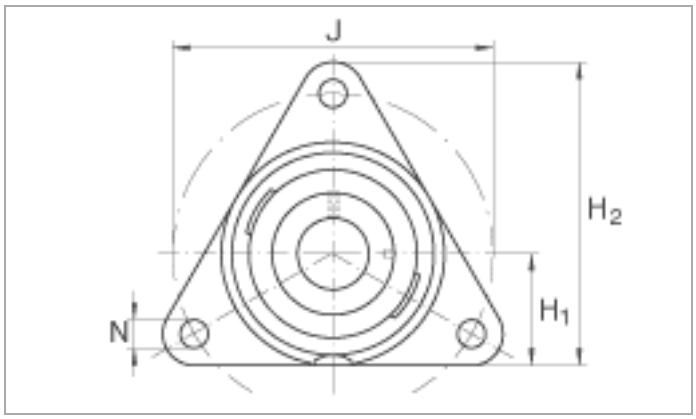
J
H2
H1
N