

Housing units PCFTR25 (Series PCFTR)

three-bolt flanged housing units, cast iron, eccentric locking collar, P seals

The datasheet is only an overview of dimensions and basic load ratings of the selected product. Please always observe all the guidelines in these overview pages. Further information is given on many products under the menu item "Description". You can also order comprehensive information via the Catalogue ordering system (http://www.ina.de/content.ina.de/en/mediathek/library/library.jsp) or by telephone on +49 (91 32) 82 - 28 97.

d	25 mm	
H_2	97 mm	
U	36 mm	
A	22 mm	
A_1	12 mm	
A_2	12,5 mm	
B_1	31 mm	
d_3 max	37,5 mm	
H_1	36 mm	
J	96 mm	
N	11,5 mm	
Q	Rp1/8	
m	0,71 kg	Mass
C_r	14900 N	Basic dynamic load rating, radial
C_{0r}	7800 N	Basic static load rating, radial
	GG.CFTR05	Designation of housing
	GRAE25-NPP-B	Designation of bearing

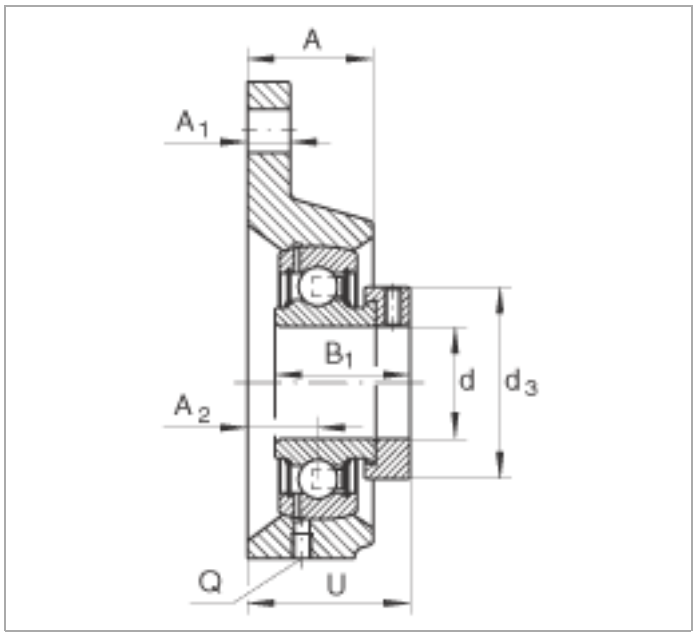
A
A1
B1
d
d3
A2
Q
U

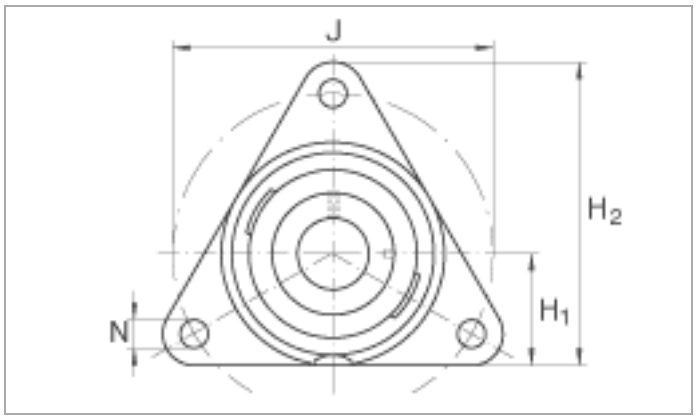
J
H2
H1
N