

Precision locknuts AM45 (Series AM)

segments for clamping

The datasheet is only an overview of dimensions and basic load ratings of the selected product. Please always observe all the guidelines in these overview pages. Further information is given on many products under the menu item "Description". You can also order comprehensive information via the Catalogue ordering system (http://www.ina.de/content.ina.de/en/mediathek/library/library.jsp) or by telephone on +49 (91 32) 82 - 28 97.

d	M45X1,5	Nut thread
D	70 mm	
h	22 mm	
b	6 mm	H11
c	6 mm	
d_1	63 mm	
m	M6	Grub screw thread
t	8 mm	
m	0,34 kg	Mass
M_m	5 Nm	Tightening torque of grub screw
F_{aB}	360000 N	Ultimate axial load
M_L	220 Nm	Breakaway torque
M_{AL}	65 Nm	Reference tightening torque for breakaway torque
M_M	2,9 kg x cm^2	Mass moment of inertia
		With 6 segments
		Attention: If precision locknuts AM are fitted using the adapter AMS, a maximum tightening torque of twice the value given in the dimension table for the bearing is permissible.

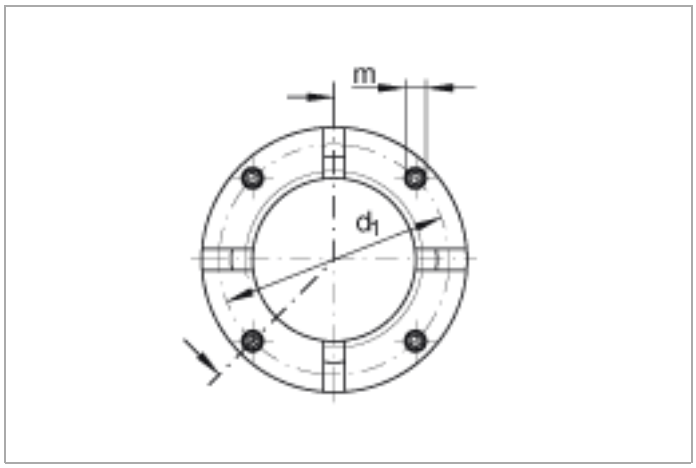
m
d_1

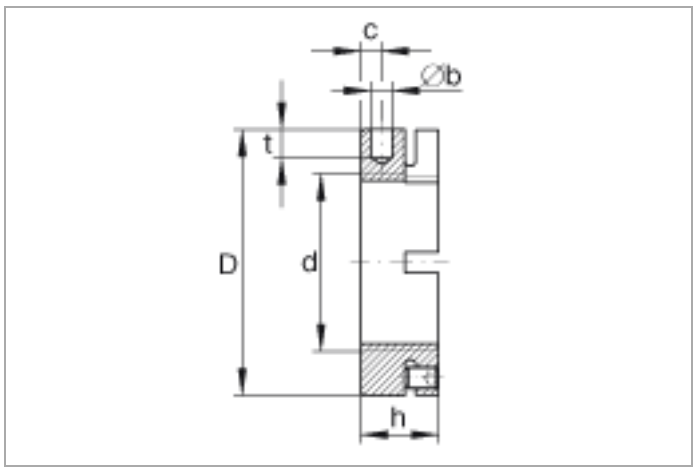
c
∅b
t
D
d
h