Bridge handles

Technopolymer

STANDARD EXECUTIONS

- **M.443-CH:** glass-fibre reinforced polyamide based (PA) technopolymer, black, orange, grey, red and green colours, matte finish.

Pass-through holes for cylindrical-head screws with hexagon socket.

- **M.443-N-CH:** glass-fibre reinforced polypropylene based (PP) technopolymer, black colour.

Pass-through holes for cylindrical-head screws with hexagon socket.

- **M.443-SH:** glass-fibre reinforced polyamide based (PA) technopolymer, black colour.

Pass-through holes for countersunk head screws.

- **M.443-EH:** glass-fibre reinforced polyamide based (PA) technopolymer, black colour.

Pass-through holes for cylindrical-head screws with hexagon socket, hexagonal-head screws or standard lock nuts.

TECHNICAL DATA

Tensile stress and impact strength: F1, F2, L1 and L2 values reported in the table are the result of breaking tests carried out with the appropriate dynamometric equipment under the test conditions shown in the figure with ambient temperature.



ELESA Original design

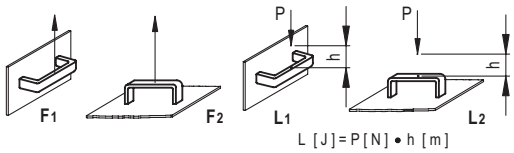

M.443-CH

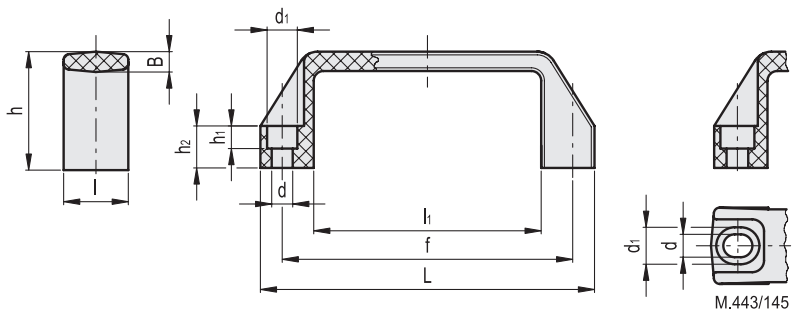

M.443/145
M.443/180

* Complete with colour index, example: 37002 M.443/110-CH-C2

C9	C2	C31	C6	C17
RAL9005	RAL2004	RAL7031	RAL3000	RAL6017

M.443-CH

Code C9	Code C2	Code C31	Code C6	Code C17	Description	L	f	d	d1	h	h1	h2	B	l	l1	F1 [N]	F2 [N]	L1 [J]	L2 [J]	⚖
37001	37002	37004	37005	37006	M.443/110-CH-*	109	93.5±0.5	6.5	10.5	38	7	13	6	21	74	3500	2500	15	8	26
37111	-	-	-	-	M.443/140-6-CH-*	137	117±1	6.5	10.5	41	7	15	7	26	93	4500	2500	20	13	44
37101	37102	37104	37105	37106	M.443/140-8-CH-*	137	117±1	8.5	13.5	41	8.5	15	7	26	93	4500	2500	20	13	42
37145	-	-	-	-	M.443/145-CH-*	142	120÷122±1	8.5	13.5	41	8.5	15	7	26	100	3700	2500	25	14	44
37151	37152	37154	37155	37156	M.443/150-CH-*	150	132±1	8.5	13.5	45	8.5	16	7	27	108	3500	2500	27	14	47
37183	37184	37185	-	37182	M.443/170-CH-*	160	140±1	8.5	13.5	46	8.5	16	7	27	113	3400	2600	27	20	50
37191	37192	37193	-	37194	M.443/180-CH-*	172	149÷152±1	8.5	13.5	47	8.5	17	7	27	125	3000	2700	27	20	53
37241	37242	37244	-	37245	M.443/190-CH-*	179	160±1	8.5	13.5	50	8.5	17	7.5	28	132	3300	2700	29	20	60
37201	37202	37204	37205	37206	M.443/200-CH-*	196	179±1	8.5	13.5	50	8.5	17	7.5	28	151	2800	2700	33	20	70
37251	37252	37254	-	37255	M.443/260-CH-*	260	235±1	10.5	16.5	54	10.5	20	8.5	30	201	3200	3500	40	34	118

ELESA and GANTER models all rights reserved in accordance with the law.
Always mention the source when reproducing our drawings.

M.443 Bridge handles

M.443-N-CH

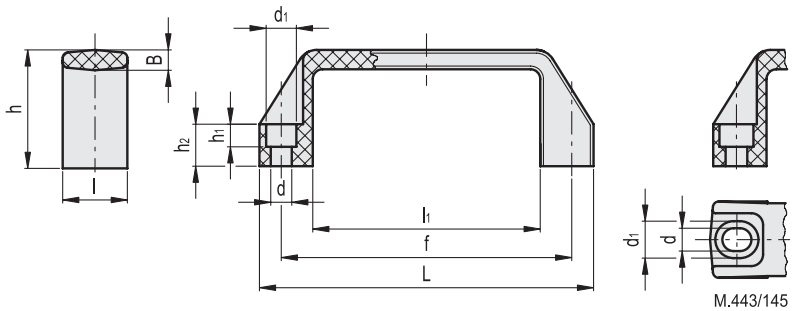

M.443/145
M.443/180

M.443-N-CH

Code	Description	L	f	d	d1	h	h1	h2	B	l	l1	F1 [N]	F2 [N]	L1 [J]	L2 [J]	⚖
37031	M.443/110 N-CH	109	93.5±0.5	6.5	10.5	38	7	13	6	21	74	1700	1300	8	3	21
37132	M.443/140 6-N-CH	137	117±1	6.5	10.5	41	7	15	7	26	93	2000	1500	10	4	36
37131	M.443/140 8-N-CH	137	117±1	8.5	13.5	41	8.5	15	7	26	93	2000	1500	10	4	34
37143	M.443/145-6-N-CH	142	120÷122±1	6.5	13.5	41	8.5	15	7	26	100	1600	1500	12	5	37
37144	M.443/145 N-CH	142	120÷122±1	8.5	13.5	41	8.5	15	7	26	100	1600	1500	12	5	36
37181	M.443/150 N-CH	150	132±1	8.5	13.5	45	8.5	16	7	27	108	2000	1300	12	5	40
37186	M.443/170 N-CH	160	140±1	8.5	13.5	46	8.5	16	7	27	113	1800	1300	13	6	44
37196	M.443/180 N-CH	172	149÷152±1	8.5	13.5	47	8.5	17	7	27	125	1800	1300	14	7	46
37246	M.443/190 N-CH	179	160±1	8.5	13.5	50	8.5	17	7.5	28	132	1800	1300	15	7	54
37231	M.443/200 N-CH	196	179±1	8.5	13.5	50	8.5	17	7.5	28	151	1800	1300	16	8	62
37281	M.443/260 N-CH	260	235±1	10.5	16.5	54	10.5	20	8.5	30	201	1700	1700	17	11	92

M.443-SH

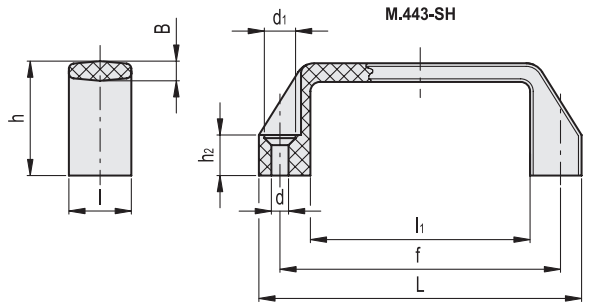

M.443-EH

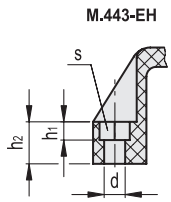

M.443-SH

Code	Description	L	f	d	d1	h	h2	B	l	l1	F1 [N]	F2 [N]	L1 [J]	L2 [J]	⚖
37036	M.443/110-SH	109	93.5±0.5	5.5	10	38	13	6	21	74	3500	2500	16	6	24
37136	M.443/140-SH	137	117±1	6.5	12	41	15	7	26	93	4500	2500	17	7	44
37146	M.443/145-SH	142	122±1	6.5	12	41	15	7	26	100	3700	2500	25	14	45
37187	M.443/170-SH	160	140±1	6.5	12	46	16	7	27	113	3400	2600	27	20	64
37199	M.443/180-SH	172	150±1	6.5	12	47	17	7	27	125	3000	2600	27	15	54
37247	M.443/190-SH	179	160±1	6.5	12	50	17	7	28	132	3300	2700	29	20	70
37236	M.443/200-SH	196	179±1	6.5	12	50	17	7.5	28	151	3500	2700	22	15	72

M.443-EH

Code	Description	L	f	d	s	h	h1	h2	B	l	l1	F1 [N]	F2 [N]	L1 [J]	L2 [J]	⚖
37037	M.443/110-EH-5	109	93.5±0.5	5.5	8	38	6	13	6	21	74	3500	2500	15	8	27
37137	M.443/140-EH-6	137	117±1	6.5	10	41	6	15	7	26	93	4500	2500	20	13	44
37138	M.443/140-EH-8	137	117±1	8.5	13	41	8.5	15	7	26	93	4500	2500	20	13	42
37141	M.443/145-EH-6	142	122±1	6.5	10	41	6.5	15	7	26	100	3700	2500	25	14	45
37189	M.443/170-EH-6	160	140±1	6.5	10	46	6.5	16	7	27	113	3400	2600	27	20	51
37198	M.443/180-EH-6	172	150±1	6.5	10	47	6.5	17	7	27	125	3000	2600	27	15	54
37249	M.443/190-EH-6	179	160±1	6.5	10	50	6.5	17	7	28	132	3300	2700	29	20	57

ELESA and GANTER models all rights reserved in accordance with the law.
Always mention the source when reproducing our drawings.